144: UTILITY CART
ASSEMBLY AND OPERATION INSTRUCTIONS

SAVE THESE INSTRUCTIONS FOR FUTURE USE

Info: The most current version of these instructions can be found online at www.intensa.net.

⚠ **WARNING: Important! Read and understand these instructions before assembling the Utility Cart. If you do not understand any part of these warnings, cautions or instructions, contact a healthcare professional for direction in the use of this product.**

⚠ **WARNING: If components are damaged or missing, contact your dealer immediately. DO NOT use substitute parts. Use only Intensa replacement parts. Non-Intensa replacement parts could cause personal injury and damage to the Utility Cart.**

⚠ **WARNING: GF Health Products, Inc. assumes no responsibility for any damage or injury caused by improper assembly or use of this product.**

UNPACKING

1. Check for any obvious damage to the carton or its contents. If damage is evident, notify the carrier or your authorized Intensa Distributor.
2. Remove all loose packing from the carton(s).
3. Carefully remove all components from the carton(s).

ASSEMBLY

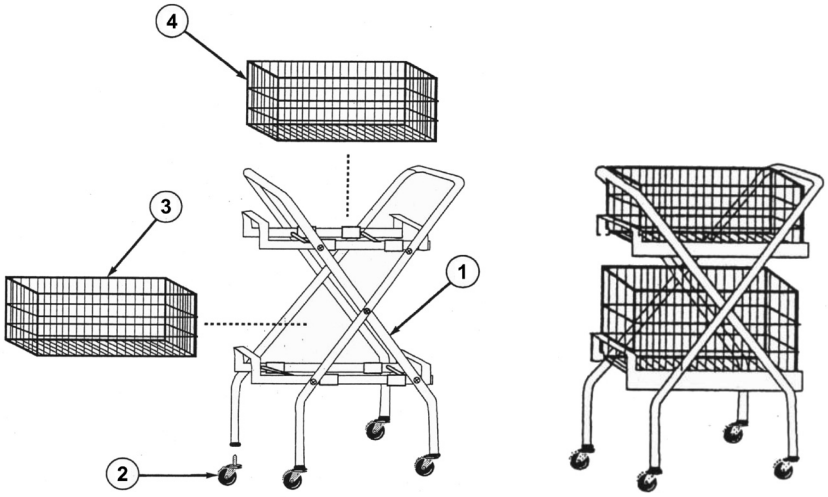

1. Unfold Utility Cart frame. Step numbers are shown in above left illustration.

⚠ **WARNING: Take care not to be pinched by moving parts while opening Utility Cart.**

2. Insert casters into frame legs.
3. Place 12" basket on frame as shown above. Ensure basket is securely seated on frame.
4. Place 6" basket on frame as shown above. Ensure basket is securely seated on frame.

⚠ **WARNING: Ensure Utility Cart is assembled as described before use.**

MAINTENANCE / CLEANING

Check frequently to ensure baskets are securely seated in frame. Check the fit and tightness frequently of all fasteners to ensure that the Utility Cart is securely assembled.

To clean: Gently wipe the Utility Cart with a soft, clean, damp cloth. To wash more thoroughly: Clean with mild soap and water. Dry Utility Cart with a clean, soft cloth.

▲ **NOTICE: DO NOT use cleansers that could damage the Utility Cart's finish.**

LIMITED WARRANTY

SCOPE OF WARRANTY

GF Health Products, Inc. ("GF") warrants to the original purchaser only that it will replace or repair components, at GF's sole discretion, that are defective in material or workmanship under normal use and service. All warranties are conditioned upon the proper use of the products strictly in accordance with good commercial practice and applicable GF instructions and manuals, including proper use and maintenance. To the extent that a third party warrants a component, GF conveys all of its rights under that warranty to the original purchaser, to the extent permitted.

This limited warranty shall only apply to defects that are reported in accordance with the provisions set forth in this warranty document, within the applicable warranty period and which, upon examination by GF or its authorized representative, prove to be a warranty item. (See Obtaining Warranty Service below) This limited warranty is not transferable.

The warranted components and time periods are set forth below:

Frame:.....1 (one) year

Baskets, Casters, and all other components not listed above: .....90 days

* Labor is not included in the warranty.

ǂ The warranty period is as designated above. If a part is replaced under warranty, the original warranty period will not be affected. All other replacement parts will be subject to the warranty period specified.

The applicable warranty period shall commence from date of shipment to the Original Purchaser, unless there is an expiration date on the component in which case the warranty shall expire on the earlier of warranty period or the expiration date.

OBTAINING WARRANTY SERVICE

Customers located in the United States who wish to report a warranty issue, must contact GF directly by calling 1.770.368.4700 or by e-mailing a request to cs@grahamfield.com. Customers located outside the United States must contact the Distributor from whom they purchased the products. In both cases, further directions will be provided once the initial contact is made. This limited warranty shall only apply to defects that are reported within the applicable warranty period. Failure to abide by the specific directions will result in denial of the warranty claim.

The warranty does not cover and GF shall not be liable for the following:

1. Defects, damage, or other conditions caused, in whole or in part, by misuse, abuse, negligence, alteration, accident, freight damage, tampering or failure to seek and obtain repair or replacement in a timely manner;
2. Products which are not installed, used, or properly cleaned and maintained as required in the official manual for the applicable product;
3. Products considered to be of a non-durable nature including, but not limited to: filters, fuses, gaskets, lubricants, and charts;
4. Accessories or parts not provided by GF;
5. Matching of color, grain or texture except to commercially acceptable standards;
6. Changes in color caused by natural or artificial light:
7. Charges by anyone for adjustments, repairs, replacement parts, installation or other work performed upon or in connection with such products which are not expressly authorized in writing, in advance, by GF;
8. Any labor or shipping charges incurred in the replacement part installation or repair;
9. Costs and expenses of regular maintenance and cleaning; and
10. Representations and warranties made by any person or entity other than GF.

ENTIRE WARRANTY, EXCLUSIVE REMEDY AND CONSEQUENTIAL DAMAGES DISCLAIMER

THIS WARRANTY IS GF'S ONLY WARRANTY AND IS IN LIEU OF ALL OTHER WARRANTIES, EXPRESS OR IMPLIED. GF MAKES NO IMPLIED WARRANTIES OF ANY KIND INCLUDING ANY IMPLIED WARRANTIES OF MERCHANTABILITY OR FITNESS FOR A PARTICULAR PURPOSE. IF ANY MODEL OR SAMPLE WAS SHOWN TO THE CUSTOMER, SUCH MODEL OR SAMPLE WAS USED MERELY TO ILLUSTRATE THE GENERAL TYPE AND QUALITY OF THE PRODUCT AND NOT TO REPRESENT THAT THE PRODUCT WOULD NECESSARILY CONFORM TO THE MODEL OR SAMPLE IN ALL RESPECTS. THIS WARRANTY IS LIMITED TO THE REPAIR OR REPLACEMENT OF THE DEFECTIVE PARTS. GF SHALL NOT BE LIABLE FOR AND HEREBY DISCLAIMS ANY DIRECT, SPECIAL, INDIRECT, INCIDENTAL, EXEMPLARY OR CONSEQUENTIAL DAMAGES, INCLUDING, BUT NOT LIMITED TO: DAMAGES FOR LOSS OF PROFITS OR INCOME, LOSS OF USE, DOWNTIME, COVER, OR EMPLOYEE OR INDEPENDENT CONTRACTOR WAGES, PAYMENTS AND BENEFITS. CERTAIN STATES MAY CONFER ADDITIONAL RIGHTS REGARDING WARRANTIES AND IN THOSE STATES GF'S LIABILITY AND THE LIABILITY OF GF'S SUPPLIERS, SHALL BE LIMITED TO THE FULLEST EXTENT PERMITTED BY LAW.

The warranties contained herein, together with GF's current Terms and Conditions, contain all the representations and warranties with respect to the subject matter of this document, and supersede all prior negotiations, agreements and understandings with respect thereto. The recipient of this document hereby acknowledges and represents that it has not relied on any representation, assertion, guarantee, warranty, collateral contract or other assurance, except those set out in this document.

For additional information on this product or this warranty, please contact a GF Customer Service Representative.

NOTES:

1) Additional terms and conditions may apply. See GF's General Terms and Conditions on its website: www.grahamfield.com.
2) Freight claims must be notated on the appropriate shipping documents and must be made with immediacy. International, federal and state regulations govern specific requirements for freight claims. Failure to abide by those regulations may result in a denial of the freight claim. GF will assist you in filing the freight claim.
3) Claims for any short shipment must be made within three (3) days of the invoice date.

intensa™ by graham-field

Manufactured For:
Intensa, Inc. | 1810 S. Elm Street
High Point, NC 27260 | USA
Made in Taiwan

Intensa, Inc. is a wholly owned subsidiary of GF Health Products, Inc.
© 2018, GF Health Products, Inc. All Rights Reserved.
Intensa is a registered trademark of GF Health Products, Inc.

IN_144-INS-LAB-RevB25

+1 770.368.4700

Information contained herein is subject to change without notice.
The most current and complete product information can be found on our website.

www.intensa.net | www.grahamfield.com

graham field™